practical ideas for your home

workbench®

Thank You!

You have successfully downloaded your document from Workbenchmagazine.com. Below are some tips for Trouble-Free Printing

1) Clear printer memory. If you are unable to print this document, turn off your printer for at least 15 seconds and try again.

2) Print two or three pages at a time. If clearing the printer memory didn't help, try printing only two or three pages at one time, rather than sending the entire file

3) If a document is required to be at an accurate scale set the page scaling option to "none" in your printer settings.

4) Get advanced printer help. Visit Adobe Support for instructions in troubleshooting common printer problems.

http://www.adobe.com/support/techdocs/316508.html

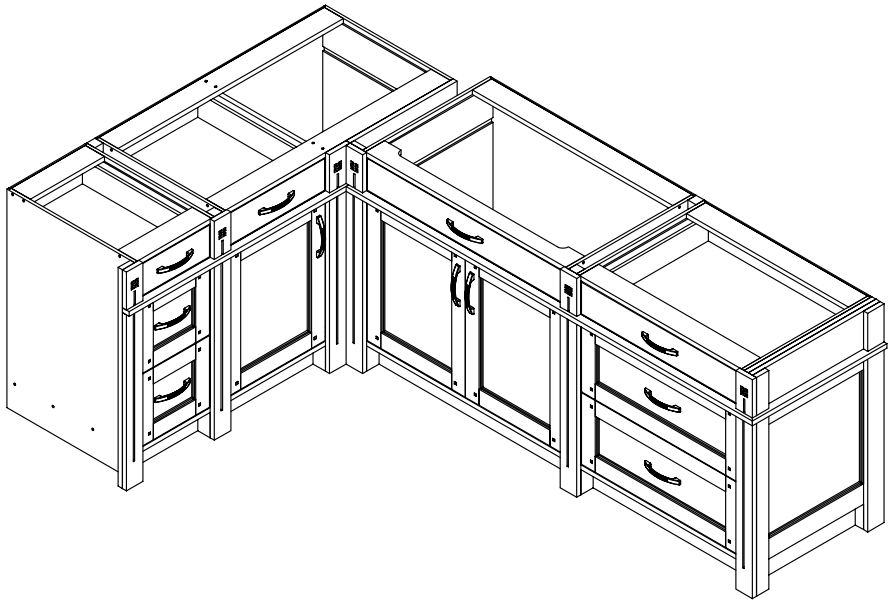

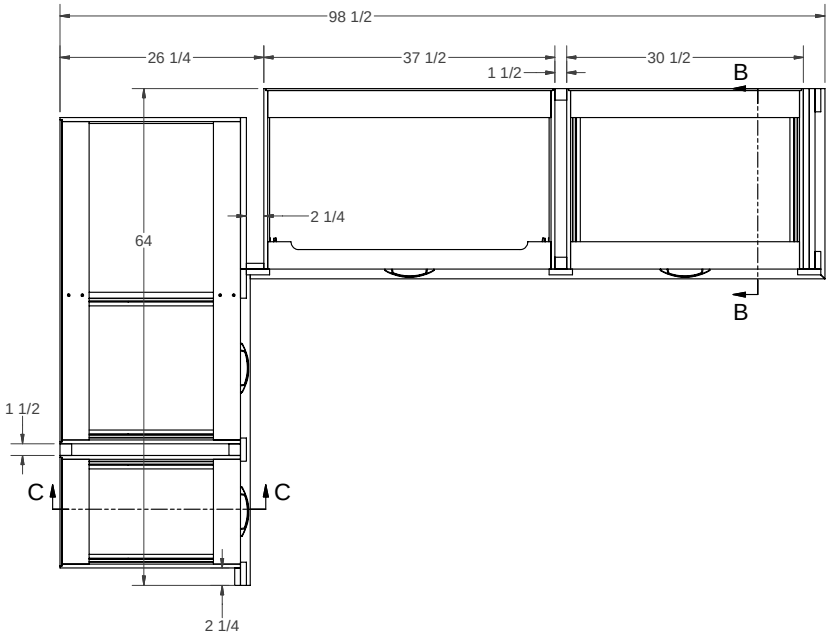

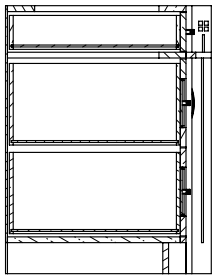

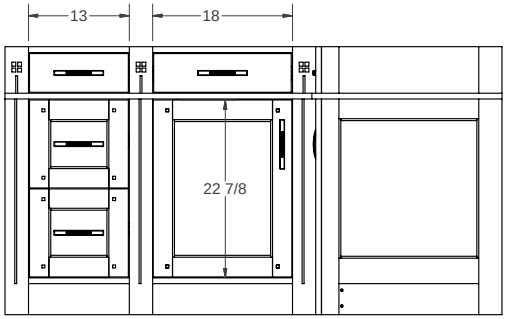

SECTION C-C

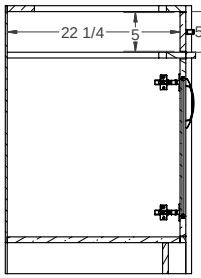

SECTION A-A

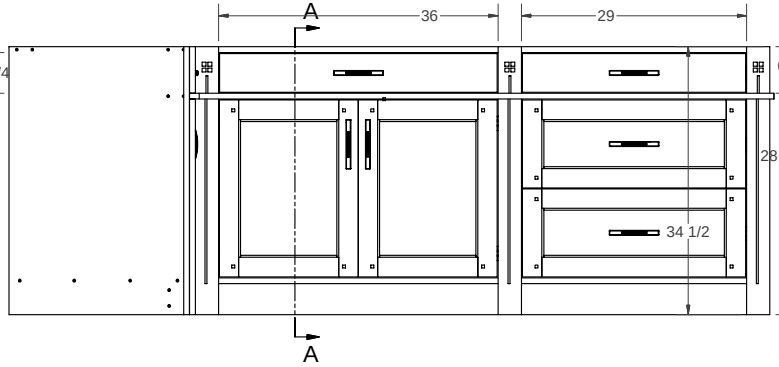

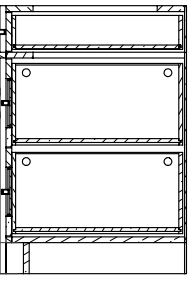

SECTION B-B

REVISED JULY 27,05

WORKBENCH	291 Kitchen Upgrade	Downing	1

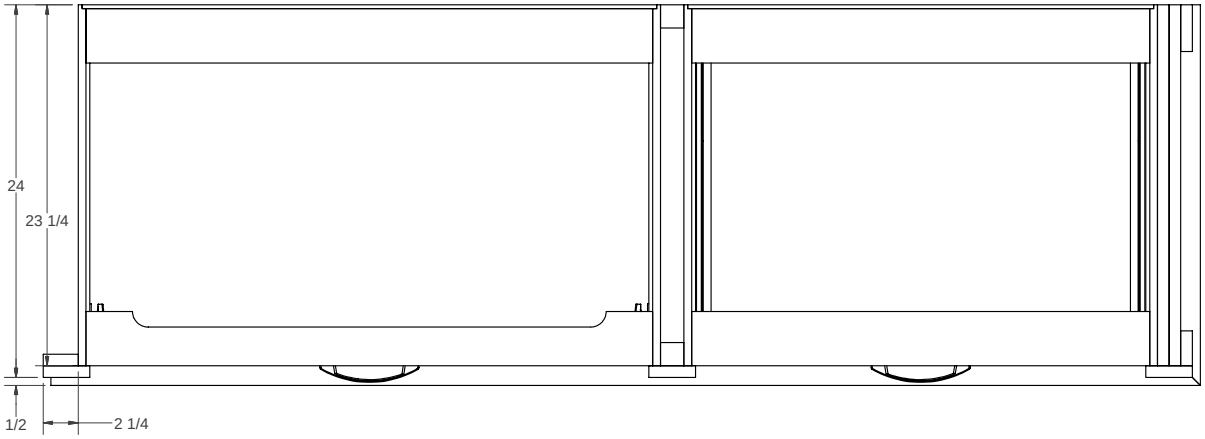

TOP VIEW

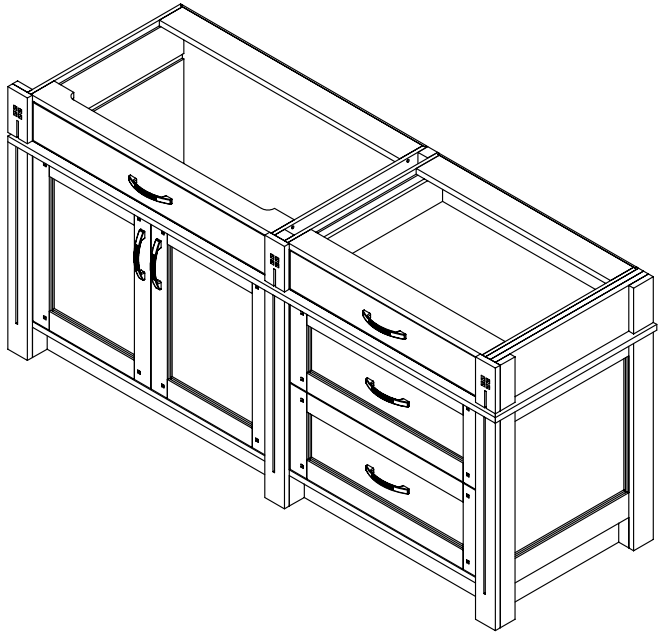

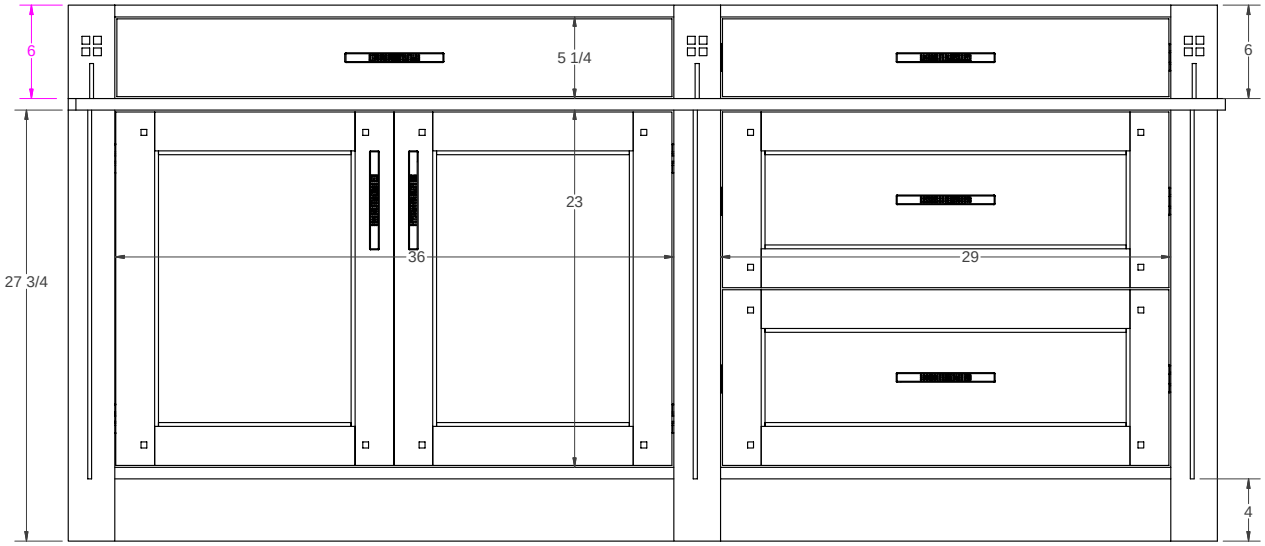

FRONT VIEW

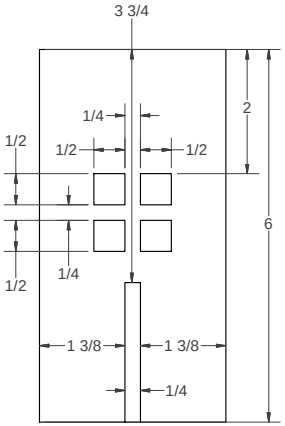

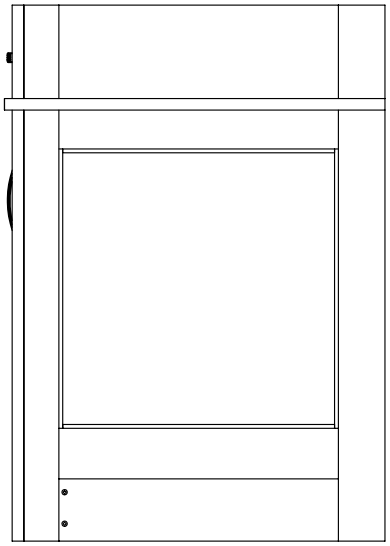

END VIEW

WORKBENCH	291 Kitchen Upgrade	Downing	2

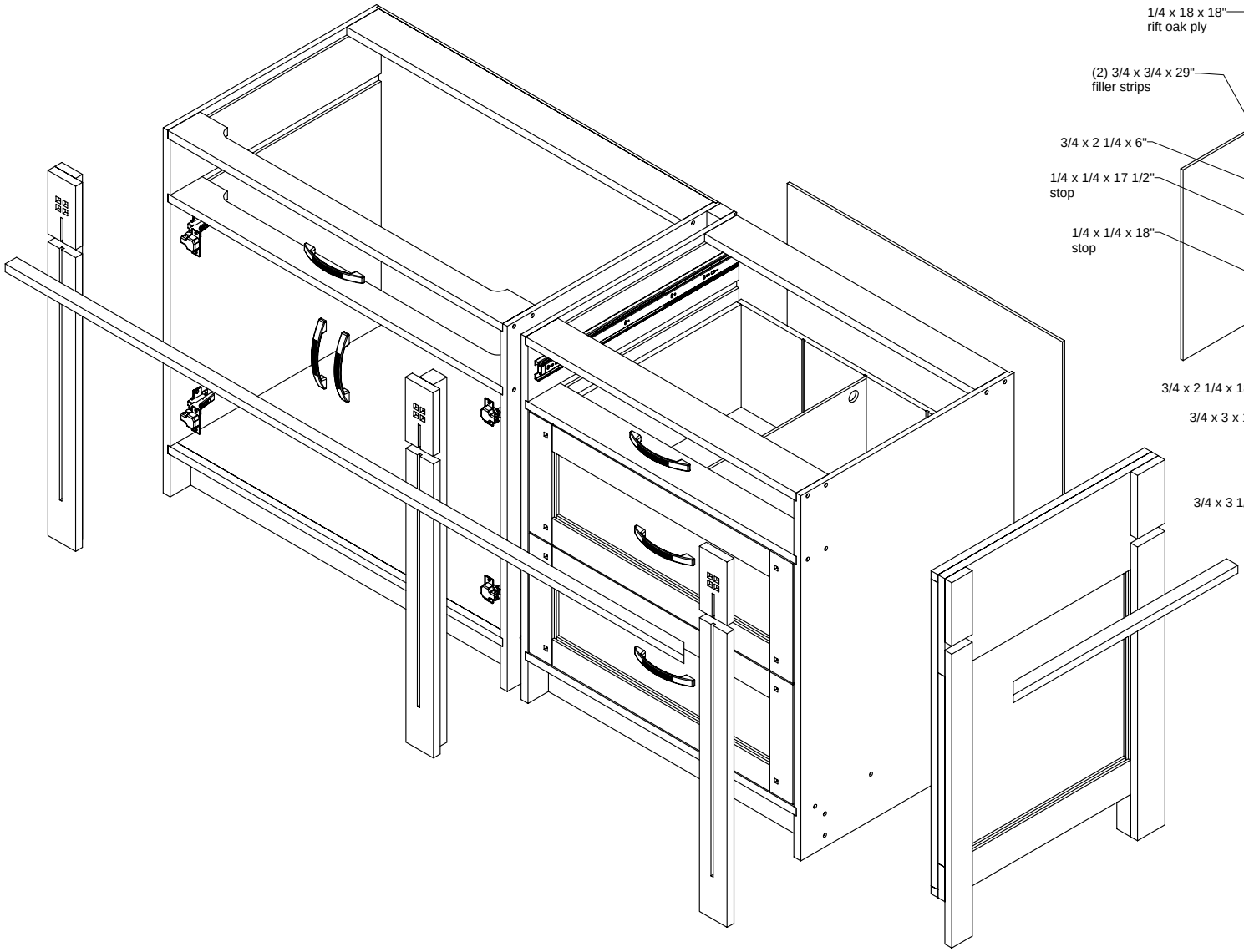

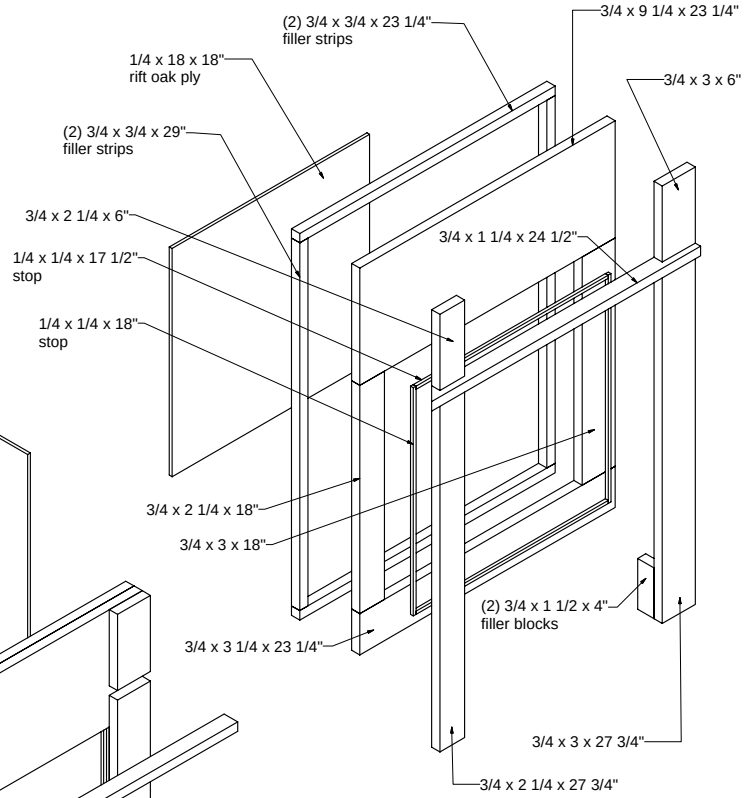

WORKBENCH	291 Kitchen Upgrade	Downing	3

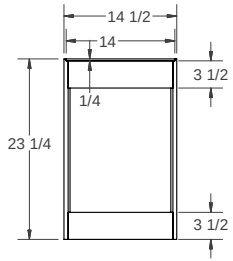

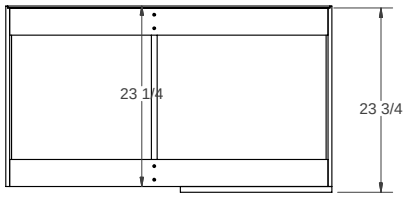

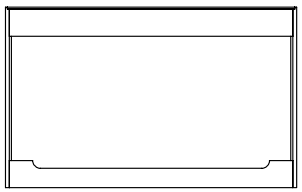

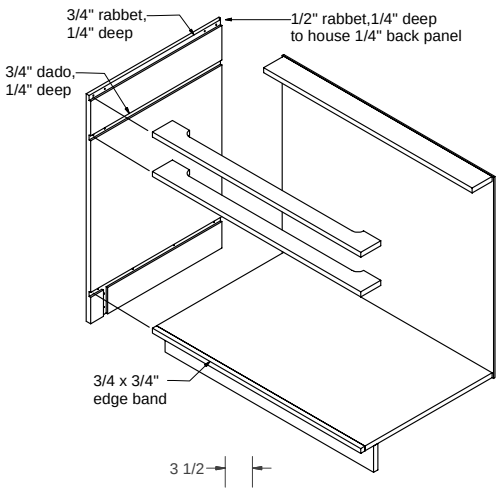

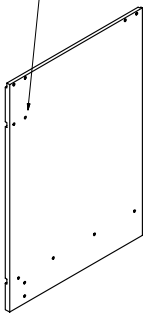

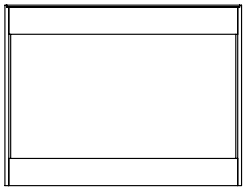

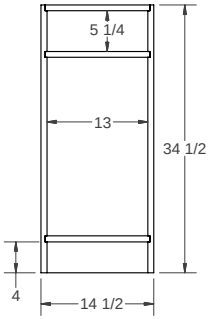

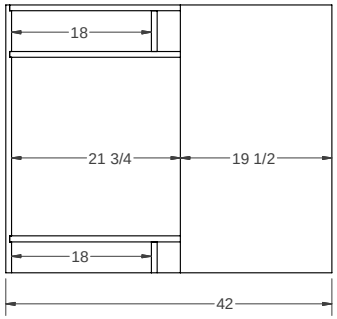

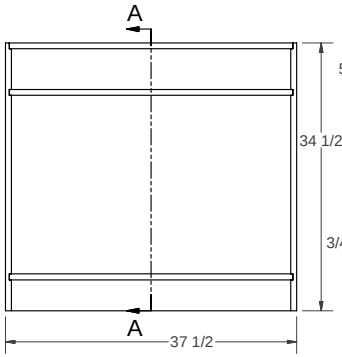

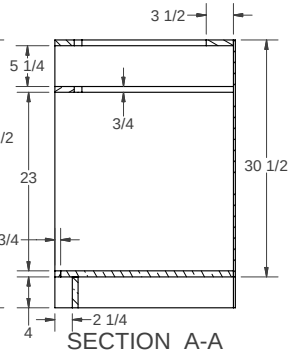

SECTION A-A

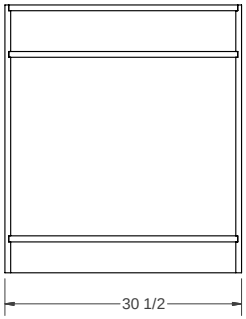

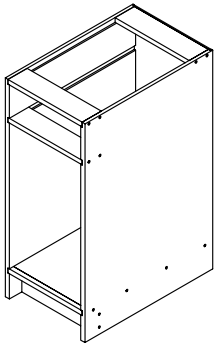

SMALL DRAWER BASE

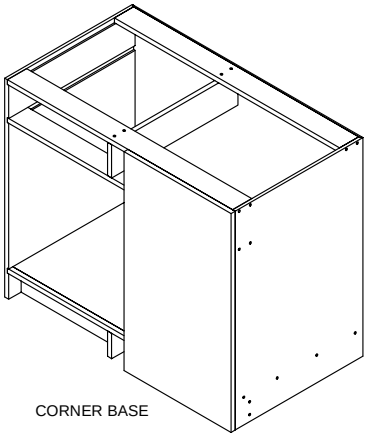

CORNER BASE

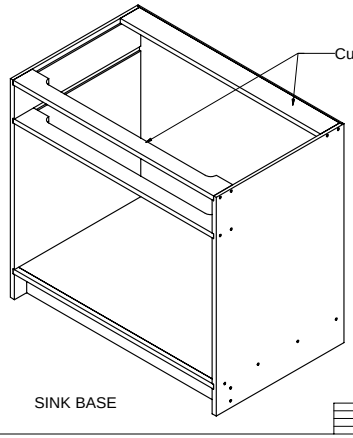

SINK BASE

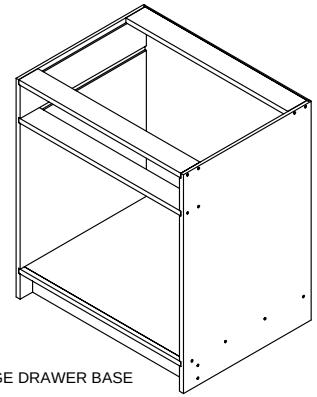

LARGE DRAWER BASE

WORKBENCH	291 Kitchen Upgrade	Downing	4

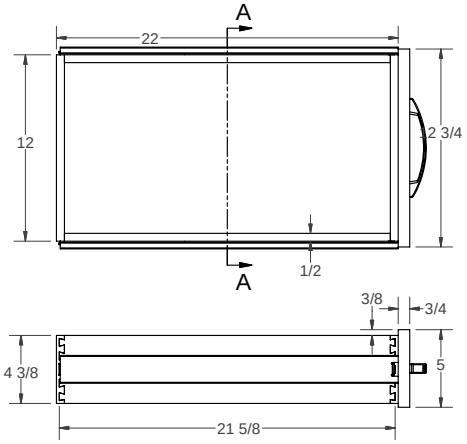

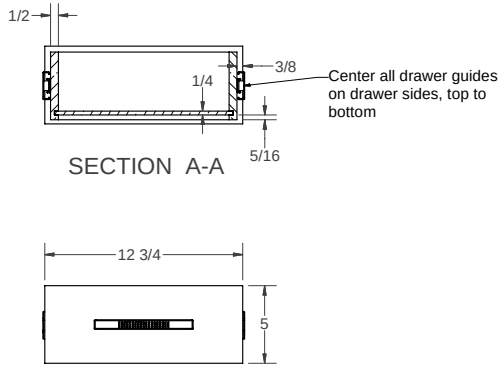

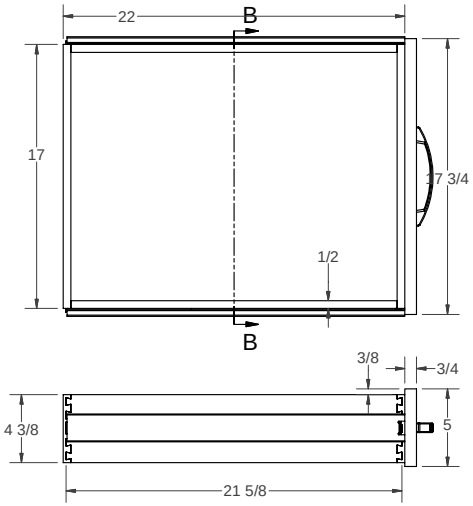

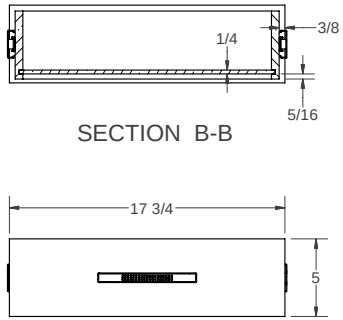

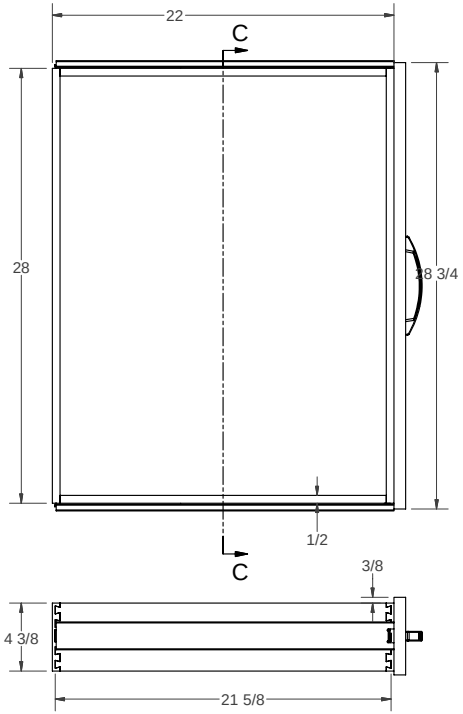

Drawer Slides
Blum #34876
22" whit epoxy-coated

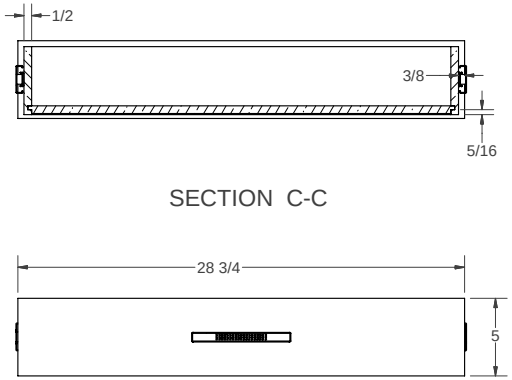

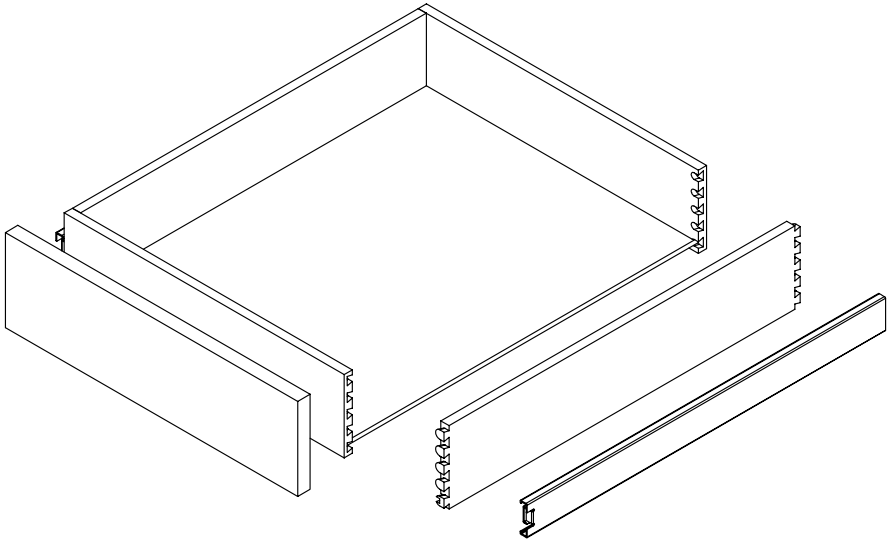

REVISED JULY 27,05

WORKBENCH	291 Kitchen Upgrade	Downing	5

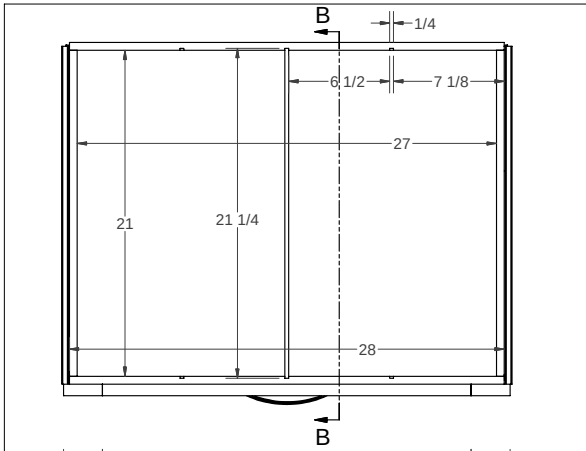

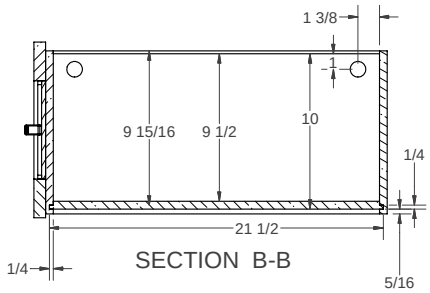

SECTION B-B

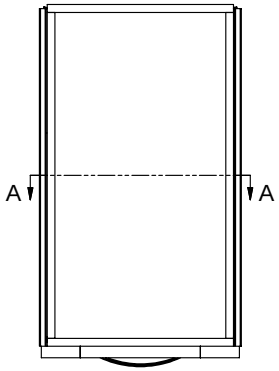

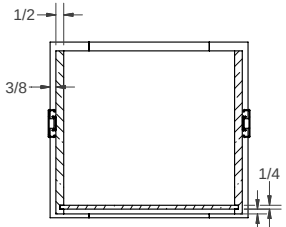

SECTION A-A

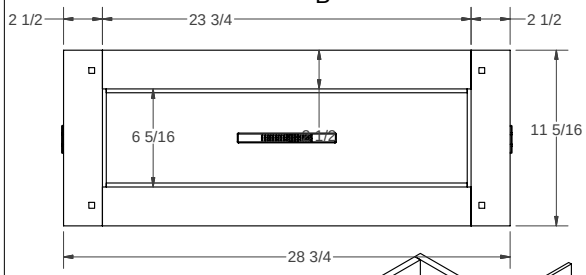

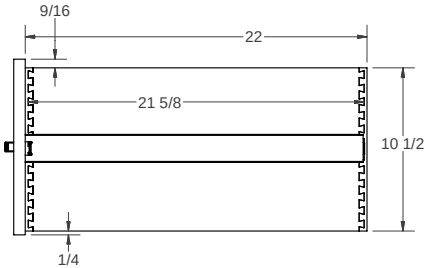

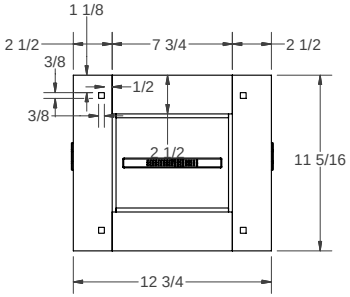

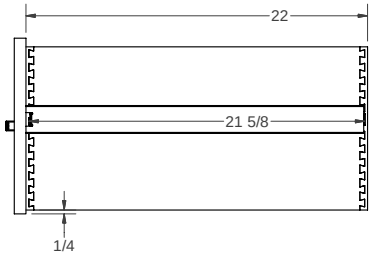

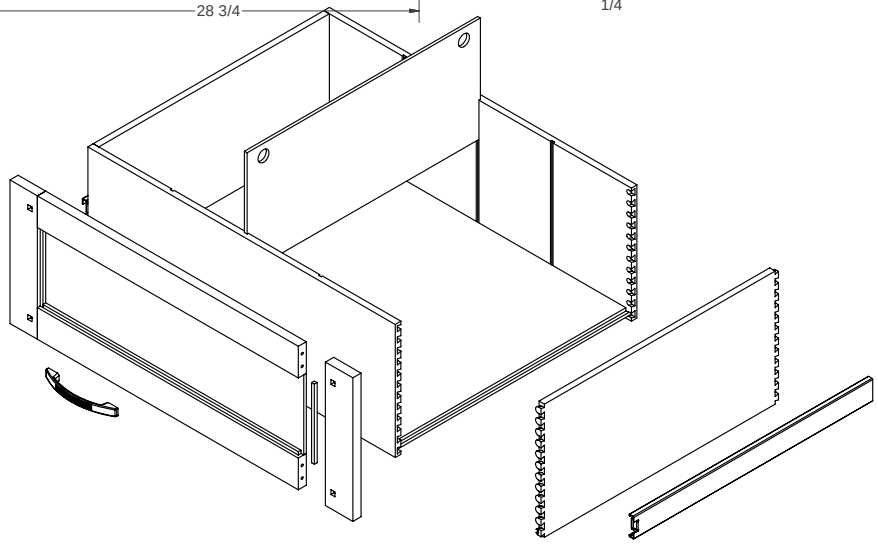

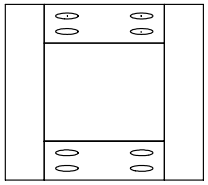

REVISED JULY 27,05

WORKBENCH	291 Kitchen Upgrade	Downing	6

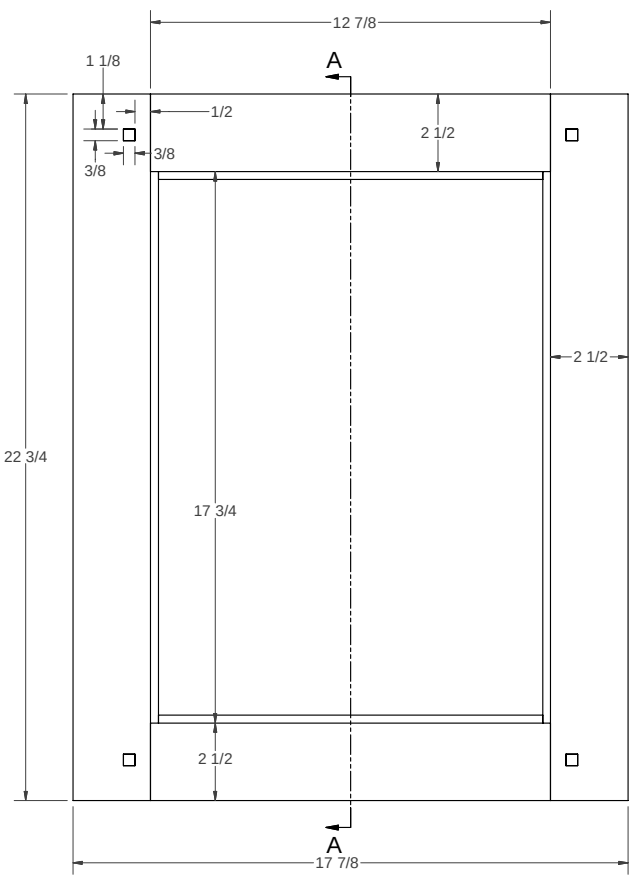

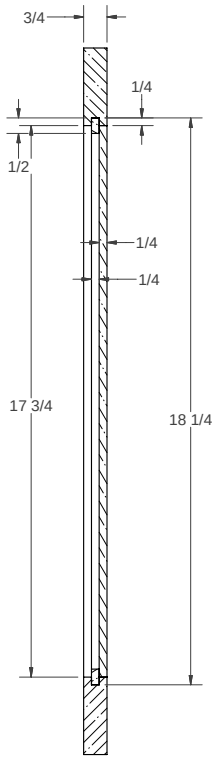

SECTION A-A

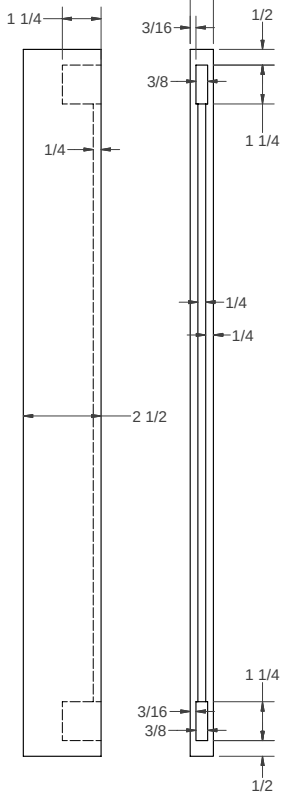

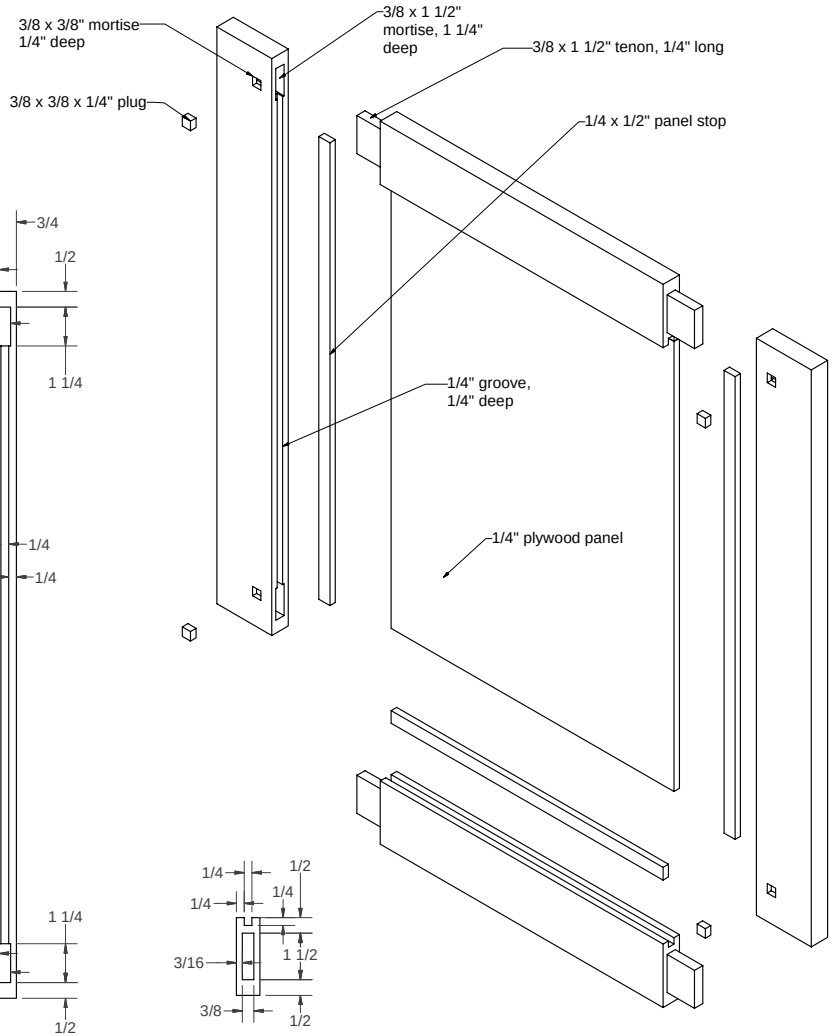

WORKBENCH	291 Kitchen Upgrade	Downing	7

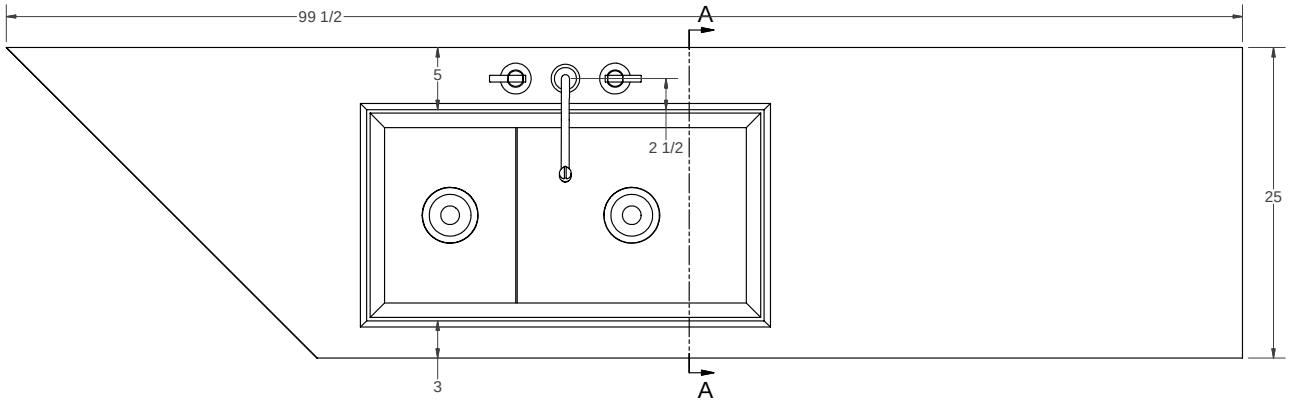

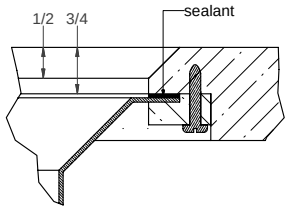

DETAIL A
SCALE 1 : 1

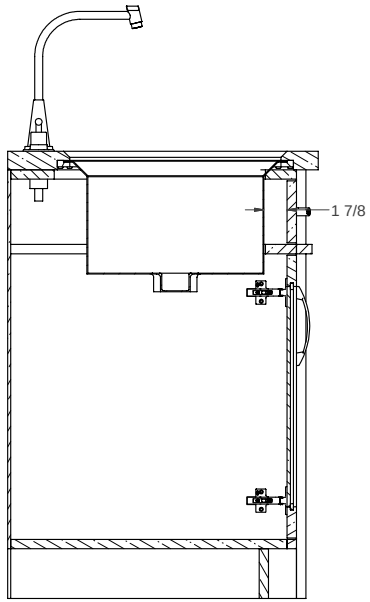

SECTION B-B

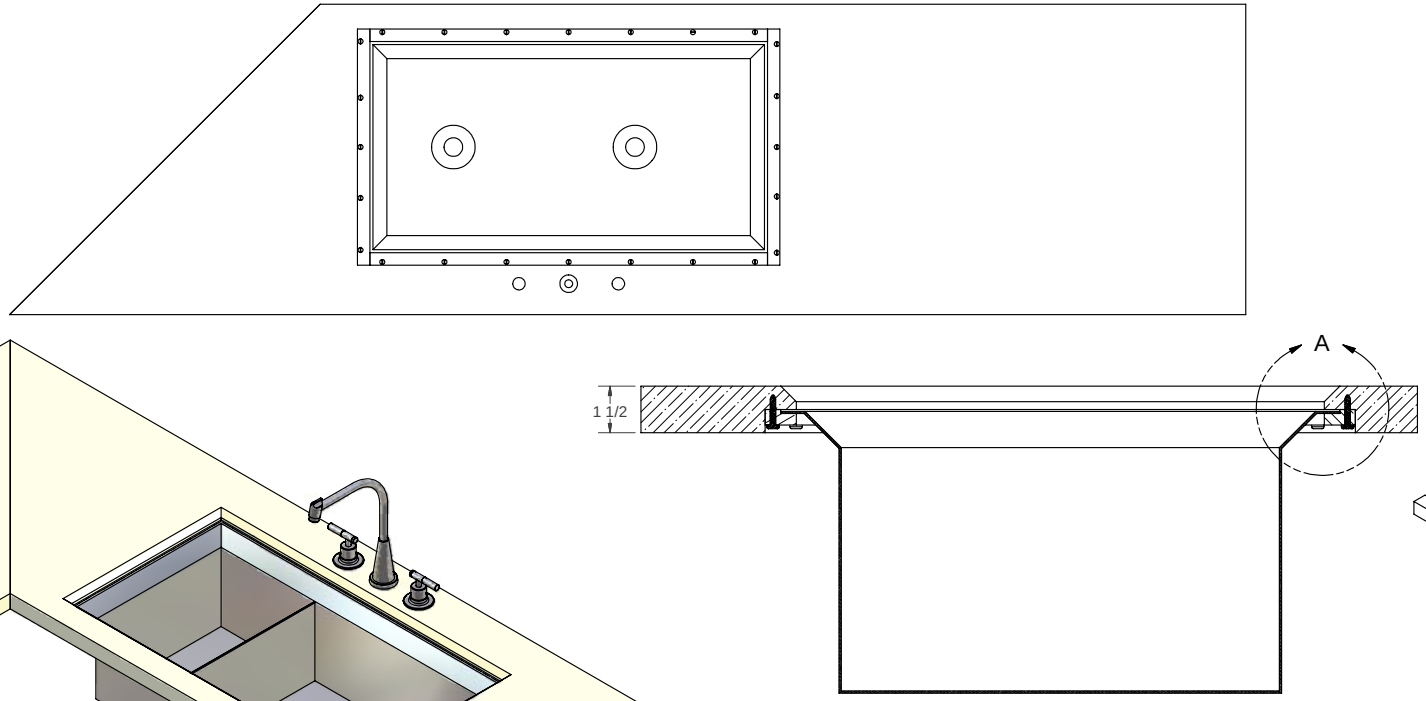

SECTION A-A

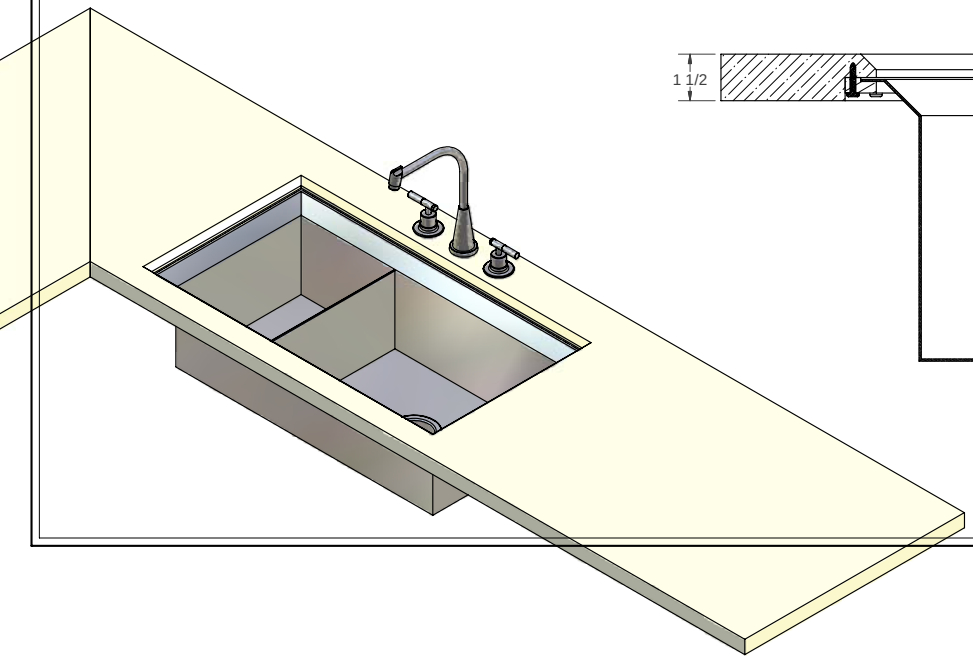

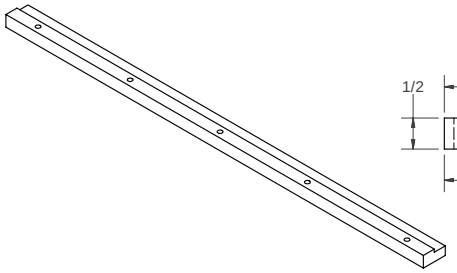

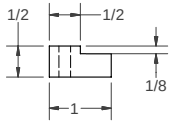

WORKBENCH	UNDER-MOUNT SINK	Downing	1

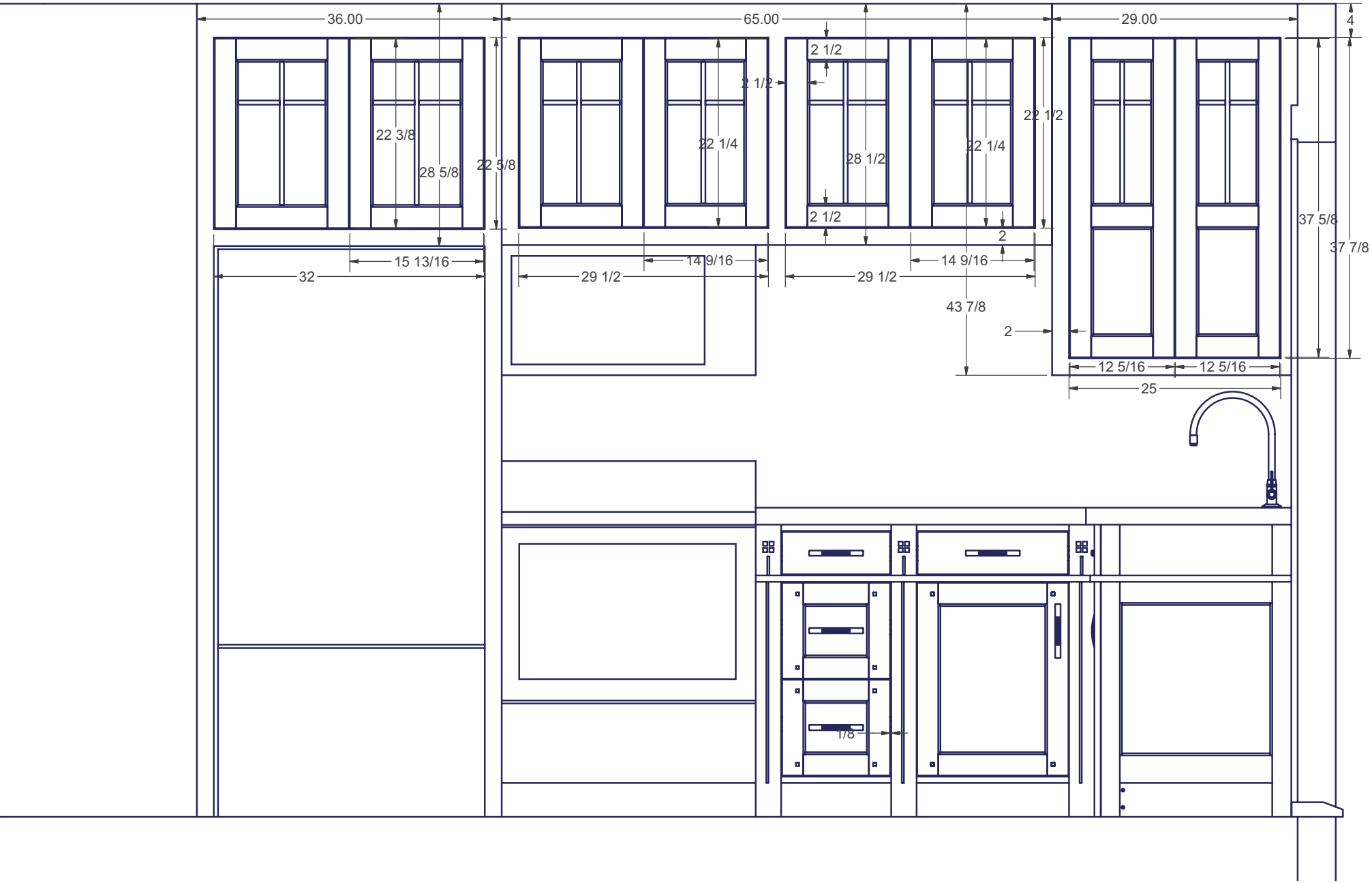
36.00
65.00
29.00
4
2 1/2
2 1/2
22 3/8
28 5/8
22 5/8
22 1/4
28 1/2
22 1/4
22 1/2
2 1/2
2
37 5/8
37 7/8
15 13/16
14 9/16
14 9/16
32
29 1/2
29 1/2
43 7/8
2
12 5/16
12 5/16
25
1/8